ICC-ES Evaluation Report

ESR-2787

Reissued May 2025

Subject to renewal May 2027

This report also contains:

- City of LA Supplement
- FL Supplement w/HVHZ

ICC-ES Evaluation Reports are not to be construed as representing aesthetics or any other attributes not specifically addressed, nor are they to be construed as an endorsement of the subject of the report or a recommendation for its use. There is no warranty by ICC Evaluation Service, LLC, express or implied, as to any finding or other matter in this report, or as to any product covered by the report.

Copyright © 2025 ICC Evaluation Service, LLC. All rights reserved.

DIVISION: 03 00 00—CONCRETE Section: 03 16 00—Concrete Anchors DIVISION: 06 00 00—WOOD, PLASTICS AND COMPOSITES Section: 06 05 23—Wood, Plastic and Composite Fastenings	REPORT HOLDER: MITEK® INC.	EVALUATION SUBJECT: CAST-IN-PLACE STRUCTURAL CONNECTORS AND COLUMN BASES EMBEDDED IN CONCRETE	

1.0 EVALUATION SCOPE

Compliance with the following codes:

- 2024, 2021, 2018, 2015 and 2012 *International Building Code®* (IBC)
- 2024, 2021, 2018, 2015 and 2012 *International Residential Code®* (IRC)

Properties evaluated:

- Structural
- Use with treated lumber

2.0 USES

2.1 General:

The products described in this report are connectors used to transfer uplift and lateral loads from wood framing members to cast-in-place concrete in accordance with IBC Section 1604.8 and are alternatives to the cast-in-place concrete anchors addressed in IBC Section 1901.3 (2012 IBC Sections 1908 and 1909).

2.1.1 Foundation Anchors: The FA3 and FA4 foundation anchors are used to attach wood sill plates to concrete in accordance with 2024 IBC Sections 2308.7 and 2308.10.7.3 (2021, 2018 and 2015 IBC Sections 2308.3 and 2308.6.7.3; 2012 IBC Sections 2308.3.3, 2308.6, 2308.12.8 and 2308.12.9) and IRC Sections R403.1.6 and R602.11.

2.1.2 Strap-Style Hold-downs: PAHD42, HPAHD22 and STAD series strap-style hold-downs are used to attach vertical framing members to concrete and act as hold-downs, for which capacity requirements are addressed in 2024 IBC Sections 2308.10.5.1 and 2308.10.5.2 (2021, 2018, 2015 and 2012 IBC Sections 2308.6.5.1 and 2308.6.5.2); IRC Sections R602.10.6.1, R602.10.6.2 and R602.10.7; and engineered designs.

2.1.3 Column Bases: The MiTek column bases described in this report are connectors used to transfer downward, uplift, and lateral loads from wood columns or posts to concrete foundations, in accordance with

IBC Section 1604.8.1, and are alternatives to the cast-in-place concrete anchors addressed in IBC Section 1901.3 (2012 IBC Sections 1908 and 1909). The column bases may also be used to separate untreated lumber posts from concrete foundations to address IBC Section 2304.12.2.2 (2012 IBC Section 2304.11.2.7). The column bases may also be used under the IRC in accordance with IRC Sections R301.1.3, R304.1 (2021, 2018, 2015 and 2012 Section R317.1) and R407.3.

3.0 DESCRIPTION

3.1 FA3 and FA4 Foundation Anchors:

FA3 and FA4 Foundation Anchors provide anchorage of horizontal, nominally 2-by wood sill plates to concrete foundations. These anchors are each formed from a single piece of cold-formed steel with an embedded portion and a portion which extends out of the concrete and splits into two flanges which are prepunched for installation with 10d by $1^1/_2$-inch-long nails into the wood framing members. Both flanges may be wrapped over the sill plate, or one flange may be wrapped over the sill plate with the other extended vertically along the narrow face of a stud. The FA3 and FA4 foundation anchors are available with a G90 or G185 zinc coating in accordance with ASTM A653. Anchors available with a G185 zinc coating have 'TZ' in the product designation. In accordance with IBC Section 2304.10.6.1 (2018 and 2015 IBC Section 2304.10.5.1; 2012 IBC Section 2304.9.5.1), coating type and weight for anchors used with treated lumber must be in accordance with the lumber treater's recommendations and the recommendations from MiTek. In the absence of such recommendations, the anchors with the G185 zinc coating must be used. See Table 1 and Figure 1 for more information.

3.2 PAHD42 and HPAHD22 Strap-Style Hold-downs:

PAHD42 and HPAHD22 Strap-Style Hold-downs are formed from a single piece of cold-formed steel with an embedded portion and a portion which is fastened to a vertical wood member. See Table 2 and Figure 2 for more information.

3.3 STAD Series Strap-style Hold-downs:

The STAD series includes STAD and LSTAD hold-downs, along with "RJ" versions of each model, which are for rim joist applications. Each hold-down is formed from a single piece of cold-formed steel with an embedded portion and a strap-style portion which is prepunched for fastening to a vertical wood member with 10d common or 16d sinker nails. See Table 3 and Figure 3 for more information.

3.4 WAS Wet Post Anchor:

The WAS Wet Post Anchor is a two piece anchor used to attach nominal 4-by-4, 4-by-6, and 6-by-6-inch sawn lumber wood posts to cast-in-place concrete. It is designed to provide download, lateral and uplift resistance in cracked and uncracked concrete. The anchor provides a 1 inch (25.4 mm) standoff between the post and the concrete, with the bottom of the support stand installed flush with the surface of the concrete. The WAS anchor consists of a U-shaped stirrup (straps) and a support stand. The support stand is riveted to the stirrup at the manufacturing facility. The WAS anchor straps are pre-punched with holes for use with 16d common nails or $^1/_2$-inch-diameter bolts. See Table 4 and Figure 4 for more information.

3.5 WE Wet Post Anchor:

The WE Wet Post Anchor is a one-piece anchor used to attach nominal 4-by-4, 4-by-6, and 6-by-6 sawn lumber wood posts to cast-in-place concrete. It is designed to provide lateral and uplift resistance in cracked and uncracked concrete. The WE is pre-punched for 16d common nails or $^1/_2$-inch-diameter bolts. See Table 5 and Figure 5 for more information.

3.6 EPB/EBG Elevated Post Base:

The EPB/EBG Elevated Post Bases are two-piece anchors used to attach nominal 4-by-4, 4-by-6, and 6-by-6 sawn lumber wood posts to cast-in-place concrete. They are designed to provide download, lateral and uplift resistance in cracked and uncracked concrete. The post base allows a maximum 1 inch (25.4 mm) standoff between the post and the concrete. The EPB Elevated Post Base consists of a steel bucket welded to a round steel tube with an outside diameter of $1^1/_4$ inches (32 mm) and a wall thickness of 0.070 inch (2 mm). The EBG Elevated Post Base consists of a steel bucket crimped to a round steel tube with an outside diameter of 1 inch (25 mm) and a wall thickness of 0.055 inch (1.4 mm). See Table 6 and Figure 6 for more information.

3.7 CBE Column Base:

The CBE Column Base is a two-piece anchor used to attach nominal 4-by-4, 4-by-6, and 6-by-6 sawn lumber wood posts to cast-in-place concrete. It is designed to provide uplift resistance in cracked and uncracked concrete. The anchor consists of a U shaped stirrup (straps) with a flat base plate welded to the straps. The

stirrup is embedded into the concrete so that the base plate is installed flush with the surface of the concrete. The straps and the base plate are manufactured from 12-gage steel. The CBE straps are pre-punched with holes for use with 16d common nails or $^1/_2$-inch-diameter bolts. When installed in a concrete pier, the minimum pier size must be 8 inches (203 mm) square and the pier must be reinforced with a minimum of two No. 5 reinforcing bars placed vertically at opposite corners. Larger pier dimensions may be required to provide concrete protection in accordance with the applicable codes. See Table 7 and Figure 7 for more information.

3.8 EPB44T-TZ Elevated Post Base:

The EPB44T-TZ elevated post base is a two-piece anchor used to attach nominal 4-by-4 posts to either cast-in-place concrete or a preformed concrete pier block. It is designed to provide download and uplift resistance in uncracked concrete. The base consists of a $^5/_8$-inch-diameter ASTM A307 Grade C galvanized threaded rod and a 12-gage galvanized steel bucket. The threaded rod component of the anchor is preset to provide a maximum height of $2^1/_2$ inches between the post and the concrete, eliminating direct post-to-concrete contact and providing adjustable base height to accommodate site conditions. A minimum embedment depth of $2^1/_2$ inches (64 mm) is maintained by a $1^3/_4$-inch ASTM F844 galvanized washer and a $^1/_2$-inch ASTM A536 Grade C galvanized nut. The threads of the threaded rod are indented at the $2^1/_2$-inch mark to prevent the nut-washer from moving past this point. See Table 8 and Figure 8 for more information.

3.9 Materials:

3.9.1 Connector Base Material: Unless otherwise noted, the connectors and connector components are manufactured from galvanized steel complying with ASTM A653 SS Grade 40, with a minimum yield strength of 40 ksi (276 MPa) and a minimum tensile strength of 55 ksi (379 MPa). The FA3 anchors are manufactured from steel complying with ASTM A653 SS, with a minimum yield strength of 42 ksi (289 MPa) and a minimum tensile strength of 56 ksi (385 MPa), as documented in the report holder's quality documentation. The bucket component of the EPB base is formed from steel complying with ASTM A1011 SS Grade 40, with a minimum yield strength of 40 ksi (276 MPa) and a minimum tensile strength of 55 ksi (379 MPa). The round tube component of the EPB base complies with ASTM A513 Type 1a Grade 1021 or better. The round tube component of the EBG base complies with ASTM A500 Grade B, with a minimum yield strength of 46 ksi (315 MPa) and a minimum tensile strength of 58 ksi (400 MPa).

See the tables in this report for the applicable thickness (gage). See the table below for base metal thicknesses corresponding to the steel gage:

GAGE NO.	MINIMUM BASE-METAL THICKNESS (inch)
16	0.055
14	0.070
12	0.099
10	0.129

For **SI:** 1 inch = 25.4 mm

3.9.2 Connector Corrosion Protection: Unless otherwise noted, the connectors manufactured from sheet steel are galvanized with a G90 coating. The entire EPB and EBG Elevated Post Bases are painted with a corrosion resistant primer after fabrication.

3.9.3 Wood: Wood members must be sawn lumber or engineered wood with a minimum assigned specific gravity, SG_{NDS}, or equivalent specific gravity, SG_{eq}, of 0.50, unless specifically noted otherwise in this evaluation report. For sawn lumber, SG_{NDS} must be determined in accordance with Table 12.3.3 of the ANSI/AWC *National Design Specification for Wood Construction*® (NDS) or the latest NDS Supplement. SG_{NDS} for structural glued laminated timber must be determined in accordance with Tables 5A through 5D of the NDS Supplement. SG_{eq} must be determined from an ICC-ES evaluation report on the structural composite or alternative strand lumber. Wood members must have a moisture content not exceeding 19 percent for sawn lumber or 16 percent for engineered wood, except as noted in Section 4.1.1. Each wood member must be of sufficient thickness that the specified fasteners do not protrude through the opposite side of the member. Structural composite lumber must be addressed in, and used in accordance with, a current ICC-ES evaluation report. Refer to Section 3.9.4.3 in this report for issues related to treated wood.

3.9.4 Fasteners: Fastener types and sizes noted in the tables in this report for use with the structural connectors must comply with the following requirements:

3.9.4.1 Bolts: Bolts must comply with ASTM A307 and must have a minimum bending yield strength of 45,000 psi (310 MPa). Bolt diameters must be as specified in the applicable tables of this report.

3.9.4.2 Nails: Nails must be bright or hot-dipped galvanized carbon steel complying with the material, physical property, tolerance, workmanship, protective coating and finishes, packaging and package marking

requirements specified in ASTM F1667, including the bending yield strength requirements specified in Section S1 of ASTM F1667; and must have the dimensions shown in the following table:

NAIL TYPE	NAIL LENGTH (inches)	SHANK DIAMETER (inch)	MINIMUM HEAD DIAMETER (inch)
10d×1$^1/_2$	1.5	0.148	0.281
10d common	3	0.148	0.281
16d sinker	3.25	0.148	0.310
16d common	3.5	0.162	0.310

For **SI:** 1 in. = 25.4 mm.

Alternatively, nails of other materials or finishes may be used when they are shown in an ICC-ES evaluation report as having bending yield strength and withdrawal capacity equal to or greater than those of a bright carbon steel nail of the same nominal diameter.

3.9.4.3 Fasteners Used in Treated Lumber: Nails used in contact with preservative-treated or fire-retardant-treated lumber must be hot-dipped galvanized, carbon steel nails. Nails of other materials or finishes may be used when they are shown in an ICC-ES evaluation report to have been evaluated for use in the applicable treated lumber. Bolts used in contact with preservative-treated or fire-retardant-treated wood must comply with IBC Section 2304.10.6 (2018 and 2015 IBC Section 2304.10.5; 2012 IBC Section 2304.9.5) and IRC Section R304.1 (2021, 2018, 2015 and 2012 IRC Section R317.3), as applicable.

In addition, the lumber treater's recommendations, or recommendations of MiTek, on minimum corrosion resistance and connection capacities of fasteners used with the specific proprietary preservative-treated or fire-treated lumber, must be followed.

3.9.5 Concrete: Concrete must be normal-weight concrete complying with the provisions of IBC Chapter 19 or IRC Section R402.2, as applicable. The allowable loads in the tables in this report are based on a minimum specified concrete compressive strength, f'_c, of 2,500 psi (17.24 MPa). The concrete must comply with the minimum dimensional requirements noted in the tables and figures.

3.9.6 Steel Reinforcement Bars (Rebar): Where required, steel reinforcement bars must be minimum No. 4 Grade 60 deformed reinforcing bars complying with ACI 318, unless noted otherwise.

4.0 DESIGN AND INSTALLATION

4.1 Design:

4.1.1 General: Allowable loads for use in Allowable Stress Design (ASD) shown in the tables in this report, are the lowest of the anchorage to concrete strength, connector steel strength, and wood connection strength, except for the FA3 and FA4 foundation anchors, where both concrete anchorage and wood connection strengths are tabulated. The allowable loads include the load duration factor applicable to wind and earthquake loading (C_D = 1.6) in accordance with the NDS, and no increase of these values is allowed. Allowable loads are provided for both wind design and seismic design. The allowable seismic loads address installation into either cracked or uncracked concrete and different seismic design categories (SDCs). For simultaneous loads applied in more than one direction, the connector must be evaluated using a straight line interaction equation.

The tabulated allowable loads are for connectors fastened to wood used under continuously dry interior conditions, and where sustained temperatures are 100°F (37.8°C) or less. When fastened to wood that will experience sustained exposure to temperatures exceeding 100°F (37.8°C), the allowable loads based on wood connection strength must be adjusted by the temperature factor, C_t, specified in the NDS. When connectors are fastened to wood having a moisture content greater than 19 percent (16 percent for engineered wood), or where wet service is expected, the allowable loads based on wood connection strength must be adjusted by the wet service factor, C_M, as specified in the NDS for lateral loads on dowel-type fasteners.

Allowable loads for installation into uncracked concrete are applicable for connectors installed in a region of a concrete member where analysis indicates no cracking at service level loads. When analysis indicates cracking at service level loads, the allowable loads for installation into cracked concrete must be used.

The allowable loads were derived assuming the entire load applied to the anchor was either from wind or seismic forces. Refer to the footnotes to the tables to determine the design strengths for use in load and resistance factor design (LRFD).

4.1.2 Foundation Anchors: The capacities shown in Table 1 are for assemblies using an FA3 or FA4 foundation anchor. Each assembly consists of a foundation anchor; a wood member having minimum specified dimensions and properties; fasteners of the tabulated type and quantity, used to attach the anchor to the wood member; and a concrete member (supplemental reinforcement not required).

When one strap leg is fastened to a stud, it is assumed that the uplift, F1, F2 and F3 loads on the anchor are transmitted through the sill plate into the anchor. Fastening requirements for transferring load from the stud to the sill plate must be determined in accordance with the applicable code.

4.1.3 Strap-style Hold-downs: The capacities shown in Tables 2 and 3 are for assemblies using strap-style hold-downs. Each assembly consists of a hold-down device; a wood member having minimum specified dimensions and properties; fasteners of the tabulated type and quantity used to attach the hold-down device to the wood member; and a concrete member with supplemental reinforcement described in the footnotes to Tables 2 and 3.

Wood members to which the hold-downs are attached must be analyzed in accordance with the NDS for combined axial tension stress and flexural stress due to hold-down eccentricities relative to the centroid of the connected wood member.

The deflection of a shear wall restrained from overturning by hold-downs installed in accordance with this report must be calculated using Equation 23-2 shown in IBC Section 2305.3 for stapled shear walls, or Equation 4.3-1 shown in Section 4.3.4 of the 2021 ANSI/AWC Special Design Provisions for Wind and Seismic, SDPWS (Section 4.3.2 of SDPWS for the 2018, 2015 and 2012 IBC) for nailed shear walls, or a proprietary deflection equation addressed in an ICC-ES evaluation report, as applicable. The total deflection values at ASD level shown in Tables 2 and 3 include all sources of hold-down assembly elongation (e.g., fastener slip and hold-down device extension).

4.1.4 Column Bases: Allowable loads for the column bases described in this report are shown in Tables 4 through 8 and are for allowable stress design (ASD). Methods for converting the allowable loads to design strengths for use in LRFD are addressed in the footnotes to the tables. Design of the wood members and concrete members to which the connectors are attached is outside the scope of this report, including the analysis of the wood member stresses at the connection in accordance with NDS Section 11.1.2 (2012 NDS Section 10.1.2 for the 2012 IBC and IRC). The connection of the wood member to the concrete must be considered to be a pinned (not fixed) connection. Use of the column bases to resist moments is outside the scope of this report.

4.2 Installation:

4.2.1 General: Installation of the connectors must be in accordance with this evaluation report and the manufacturer's published installation instructions. In the event of a conflict between this report and the manufacturer's published installation instructions, this report governs.

Refer to Figures 1 through 8 and the footnotes to Tables 1 through 8 for typical installation details. The connectors must be placed prior to casting the concrete in such a way as to ensure they will have the required embedment depth, spacing and edge distance. The connectors must not be bent and/or fastened to the wood until the concrete has sufficiently cured so that the anchor placement does not shift and the concrete is not damaged. The connectors must be fastened to the wood members using the fastener type and minimum quantity noted in the applicable table.

4.2.2 Foundation Anchors: Foundation anchors must be spaced a minimum of 8 inches (203 mm) and a minimum of 4 inches (102 mm) from the end of the concrete foundation wall. Anchors must be placed no more than 12 inches (305 mm) from the end of the sill plate, in accordance with the manufacturer's instructions. When one strap leg is fastened to a stud, the minimum distance from the center of the fasteners to the edge of the stud must be $^{3}/_{8}$ inch (10 mm). In addition to being fastened with the anchor, the wood stud must be fastened to the wood sill plate in accordance with the minimum fastening requirements in the code.

4.2.3 Column Bases: The column bases described in this report may be cast in place, or wet set provided concrete is properly consolidated around the embedded portion of the device. Wood members may only be attached after final set of concrete. Concrete must be fully cured prior to application of load. Wood posts must be square cut on the bottom and concentrically fitted into the base. Notching of the posts, using undersized posts, or making field alterations to the column bases are not allowed. The installation of nails and bolts must be in accordance with the requirements of the NDS. Holes for bolts must be predrilled between $^{1}/_{32}$-inch to $^{1}/_{16}$-inch (0.8 mm to 1.6 mm) larger than the bolt diameter in accordance with NDS Section 12.1.3.2 (2012 NDS Section 11.1.3.2 for the 2012 IBC and IRC).

4.3 Special Inspection:

4.3.1 IBC: For the purpose of determining special inspection requirements, connectors are considered to be special cases in accordance with Section 1705.1.1 of the IBC. Periodic special inspection must be provided except where otherwise required or excepted by specific provisions of the IBC.

4.3.2 IRC: For installations complying with the IRC, special inspection is not required.

5.0 CONDITIONS OF USE:

The connectors described in this report comply with, or are suitable alternatives to what is specified in, those codes listed in Section 1.0 of this report, subject to the following conditions:

5.1 The connectors must be manufactured, identified, and installed in accordance with this report and the manufacturer's published installation instructions. In the event of a conflict between this report and the manufacturer's published installation instructions, the more restrictive governs.

5.2 Calculations showing compliance with this report must be submitted to the code official. The calculations must be prepared by a registered design professional where required by the statutes of the jurisdiction in which the project is to be constructed.

5.3 Connected wood members, fasteners, concrete, and reinforcement must comply with Sections 3.9.3, 3.9.4, 3.9.5 and 3.9.6, respectively.

5.4 Adjustment factors noted in Section 4.1.1 and the applicable codes must be considered, where applicable.

5.5 Use of fasteners with preservative- or fire-retardant-treated lumber must be in accordance with Section 3.9.4.3 of this report. Foundation anchors with a G185 coating may be used with preservative- or fire-retardant-treated lumber in accordance with IBC Section 2304.10.6.1 (2018 and 2015 Section 2304.10.5.1 or 2012 IBC Section 2304.9.5). Other connectors addressed in this report may be used in accordance with the manufacturer's recommendations only.

5.6 Embedded column bases in concrete may be installed in cracked or uncracked concrete. Cracking occurs in regions of concrete where analysis indicates cracking may occur ($f_t > f_r$), subject to the conditions of this report.

5.7 The embedded column bases in this report are limited in use to resisting uplift, download, and lateral loads resulting from wind loads or earthquake loads, and gravity loads only.

5.8 Minimum concrete protection for the embedded portions of the steel column bases must be as required for steel reinforcement in accordance with IBC Section 1808.8.2.

5.9 Use of connectors is limited to dry, interior locations, which include exterior walls protected by an exterior wall envelope, except as noted in Section 4.1.1.

5.10 Special inspection must be provided in accordance with Section 4.3 of this report.

5.11 The connectors are manufactured under a quality-control program with inspections by ICC-ES.

6.0 EVIDENCE SUBMITTED

Data in accordance with the ICC-ES Acceptance Criteria for Steel Connectors for Connecting Light-frame Construction Members to Concrete (AC398), dated February 2020 (editorially revised March 2024).

7.0 IDENTIFICATION

7.1 The evaluation report number (ESR-2787) or the number of the ICC-ES index report for MiTek (ESR-2685) is included on the product label along with the name, registered trademark, or registered logo of the report holder (MiTek) and the product model (stock) number. Each connector described in this report is identified by the product model (stock) number and one or more of the following designations: MiTek, USP Structural Connectors, or USP.

7.2 The report holder's contact information is the following:

MITEK INC.
16023 SWINGLEY RIDGE ROAD
CHESTERFIELD, MISSOURI 63017
(800) 328-5934
www.mitek-us.com
uspcustomerservice@mii.com

TABLE 1—ALLOWABLE LOADS FOR FA3 AND FA4 FOUNDATION ANCHOR ASSEMBLIES[1]

ANCHOR		INSTALLATION						ALLOWABLE LOADS (lbf)						DEFLECTION AT ALLOWABLE LOAD BASED ON WOOD CONNECTION STRENGTH (inch)
Stock Number	Steel Gage	Application	Wood Sill Plate Nominal Size	Quantity of 10d×1 1/2 Nails Into: SILL PLATE Side	Quantity of 10d×1 1/2 Nails Into: SILL PLATE Top	Quantity of 10d×1 1/2 Nails Into: Stud	Concrete Stemwall Minimum Thickness (inches)	LOAD DIRECTION[1]	Based On Anchorage To Concrete Strength[2,3] Concrete Condition	Type of Load: Wind	Type of Load: Seismic for Seismic Design Categories: A & B	Type of Load: Seismic for Seismic Design Categories: C-F	Based On Wood Connection Strength $C_D = 1.6$[4,5]	
FA3	16	Both legs bent over sill plate and attached with 10d×1 1/2 nails	2×4 or 2×6	2	4	—	6	F1	Uncracked	750	750	550	625	0.090
									Cracked	525	525	460		
								F2	Uncracked	1,015	1,015	890	755	0.097
									Cracked	710	710	625		
								Uplift	Uncracked	1,350	1,350	1,120	1,010	0.066
									Cracked	945	945	830		
		One leg bent over sill plate and one leg vertical against stud and attached with 10d×1 1/2 nails	2×4 or 2×6	2	2	2	6	F1	Uncracked	750	750	550	615	0.023
									Cracked	525	525	460		
								F2	Uncracked	1,015	1,015	890	465	0.058
									Cracked	710	710	625		
								Uplift	Uncracked	1,350	1,350	1,120	755	0.015
									Cracked	945	945	830		
FA4, FA4-TZ	16	Both legs bent over sill plate and attached with 10d×1 1/2 nails	2×4 or 2×6	3	6	—	6	F1	Uncracked	1,460	1,460	1,460	1,460	0.020
									Cracked	1,225	1,225	1,075		
								F2	Uncracked	1,070	1,070	875	1,210	0.125
									Cracked	750	750	655		
								F3	Uncracked	655	655	655	655	0.125
									Cracked	585	585	510		
								Uplift	Uncracked	905	905	875	905	0.033
									Cracked	750	750	655		
		One leg bent over sill plate and one leg vertical against stud and attached with 10d×1 1/2 nails	2×4 or 2×6	3	3	3	6	F1	Uncracked	955	955	955	955	0.008
									Cracked	955	955	955		
								F2	Uncracked	1,070	1,070	875	1,430	0.125
									Cracked	750	755	655		
								F3	Uncracked	515	515	515	515	0.122
									Cracked	515	515	510		
								Uplift	Uncracked	780	780	780	780	0.041
									Cracked	750	750	655		

For **SI:** 1 inch = 25.4 mm, 1 lbf = 4.45 N.

[1]Refer to Figure 1 for illustrations of foundation anchors and typical installation; additional installation requirements and depiction of load directions.
[2]Allowable loads based on anchorage to concrete strength require a minimum anchor spacing of 8 inches, and a minimum distance from the end of the concrete wall of 4 inches.
[3]To obtain design strengths for use in LRFD, the tabulated allowable (ASD) loads based on anchorage to concrete strength for wind and SDC A & B must be multiplied by 1.67, and the tabulated allowable (ASD) loads for SDC C-F must be multiplied by 1.43.
[4]Wood members must comply with Section 3.9.3 and must have a minimum assigned specific gravity, SG_{NDS}, of 0.50.
[5]Allowable loads for anchors fastened to wood members are based on allowable stress design (ASD) and include the load duration factor (C_D) corresponding to wind and earthquake loading in accordance with the NDS. No further increase is allowed and the ASD value based on wood connection strength must also be used for LRFD.

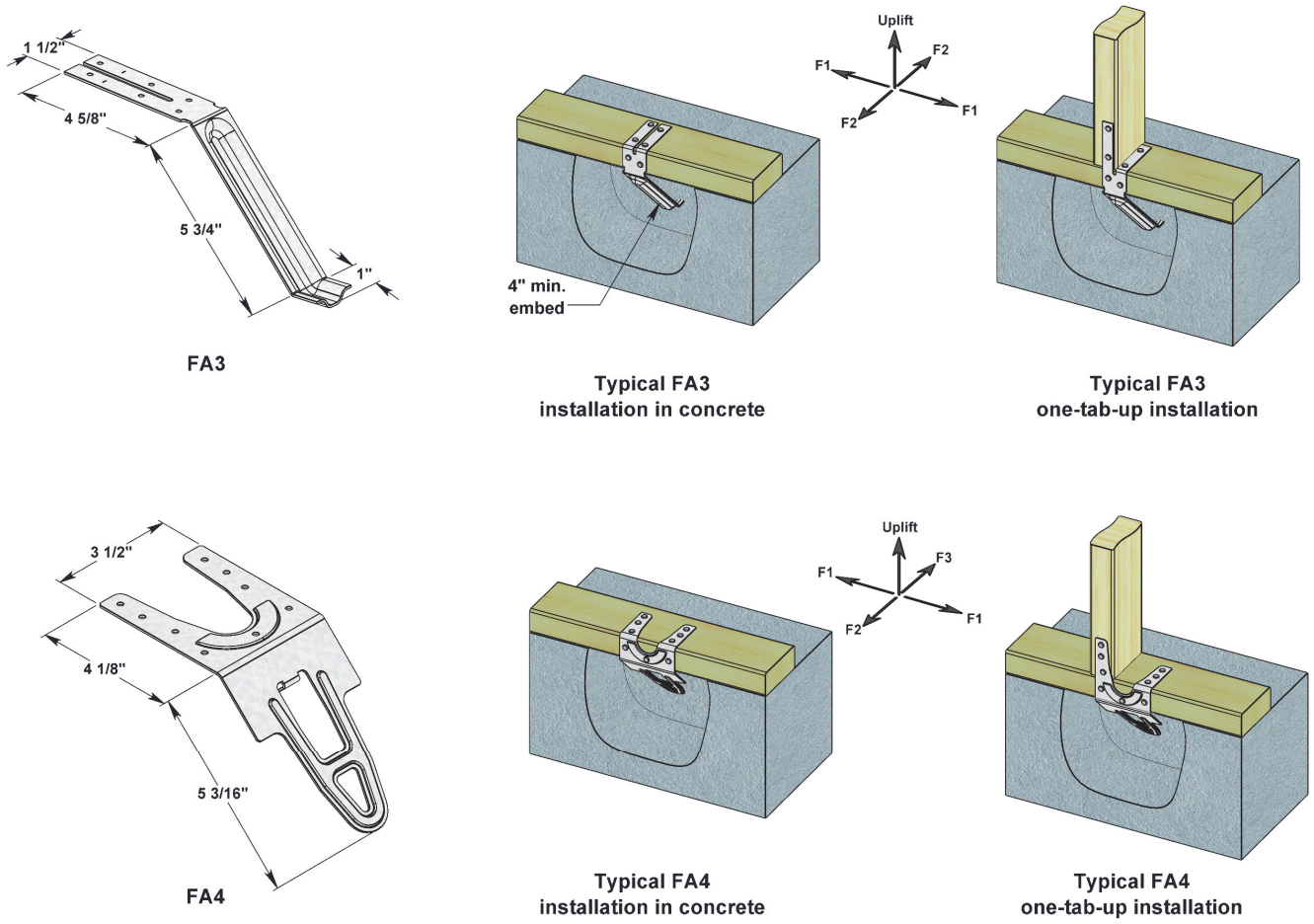

FIGURE 1—FA3 AND FA4 FOUNDATION ANCHORS

TABLE 2—ALLOWABLE UPLIFT LOADS FOR PAHD AND HPAHD STRAP STYLE HOLD-DOWN ASSEMBLIES[1,2,3,4,5,6,7]

Stock No.	Steel Gage	Dimensions (in)				Concrete Stemwall Minimum Thickness (in)	Fastener Schedule		Allowable Tension Loads (lbf)			
									Uncracked		Cracked	
		W	L	l_E	D		Qty	Type	Corner	Midwall	Corner	Midwall
Wind and SDC A & B												
HPAHD22	10	2 1/16	24 3/4	9 1/2	4 1/8	6	23	16d Common	3,110	3,265	2,175	2,285
PAHD42	12	2 1/16	16 5/8	8	5 3/4	6	15	16d Common	1,155	2,465	810	1,725
SDC C-F												
Stock No.	Steel Gage	Dimensions (in)				Concrete Stemwall Minimum Thickness (in)	Fastener Schedule		Allowable Tension Loads (lbf)			
									Uncracked		Cracked	
		W	L	l_E	D		Qty	Type	Corner	Midwall	Corner	Midwall
HPAHD22	10	2 1/16	24 3/4	9 1/2	4 1/8	6	23	16d Common	2,280	2,855	1,905	2,000
PAHD42	12	2 1/16	16 5/8	8	5 3/4	6	15	16d Common	1,010	1,850	705	1,510

For **SI:** 1 inch = 25.4 mm, 1 lbf = 4.45 N.

[1]Refer to Figure 2 for illustrations of the hold-downs and typical installation, and for additional installation requirements. Minimum one #4 rebar must be installed in the shear cone as shown in the figures.
[2]Wood members must comply with Section 3.9.3 and must have a minimum assigned specific gravity, SG_{NDS}, of 0.42.
[3]Corner strap location requires that the distance from the corner of the wall to the edge of the strap is no less than 1/2 inch. Midwall location requires that the minimum distance from the corner of the wall to the centerline of the strap is no less than 1.5 times the embedment depth. For edge distances between 1/2 inch and 1.5 times the embedment depth, use straight line interpolation to determine the allowable load.
[4]Minimum anchor spacing for full capacity is 2 times the embedment depth. For spacing less than this, reduce the tabulated capacity proportionally (the capacity of two hold-downs, installed side by side with spacing equal to the embedment depth, is equal to the value of one hold-down multiplied by 1.5).
[5]To obtain design strengths (factored strengths) for use in LRFD, the tabulated allowable (ASD) loads wind and SDC A & B must be multiplied by 1.67, and the tabulated allowable (ASD) loads for SDC C-F must be multiplied by 1.43.
[6]Deflection at highest allowable loads for installation over double 2-by lumber studs are as follows: HPAHD22 = 0.118", PAHD42 = 0.095".
[7]The strap must be fastened with nails starting from lowest pair of nail holes and working up towards the top of the strap. In many cases, not all nail holes need to be filled. No capacity increase is allowed for the use of additional nails beyond what is required in the table.

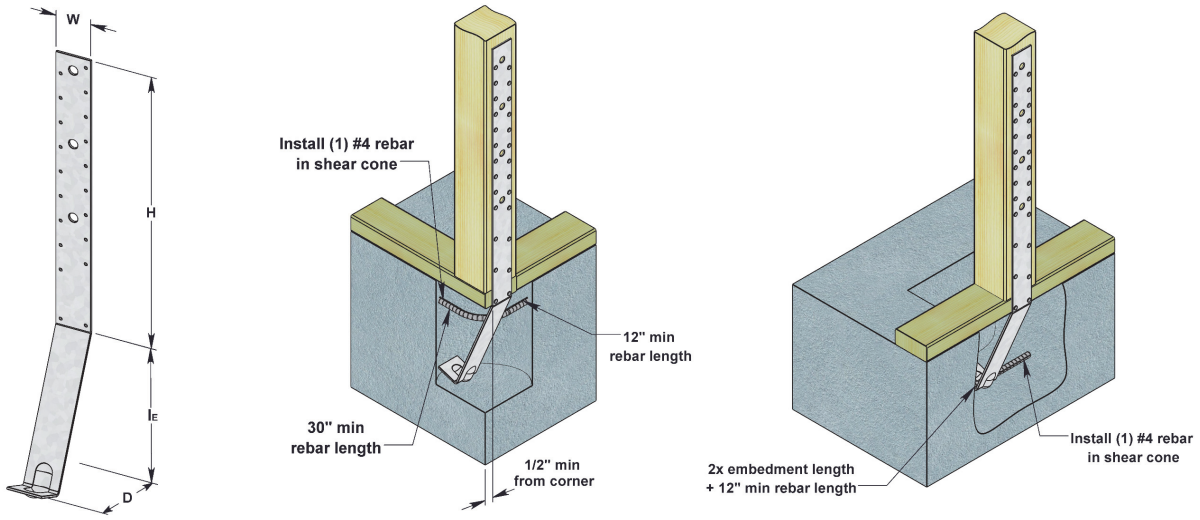

PAHD (HPAHD Similar) Typical PAHD/HPAHD corner installation Typical PAHD/HPAHD midwall installation

FIGURE 2—PAHD AND HPAHD STRAP STYLE HOLD-DOWN CONNECTORS AND ASSEMBLIES

TABLE 3—ALLOWABLE UPLIFT LOADS FOR STAD SERIES HOLD-DOWN ASSEMBLIES[1,2,3,4,5,6,7,8,9]

Stock No.	Steel Gage	Dimensions (in)					Concrete Stemwall Minimum Thickness (in)	Fastener Schedule		Allowable Tension Loads (lbf)			
										Uncracked		Cracked	
		W	L	l_E	D	CS		Qty	Type	Corner	Midwall	Corner	Midwall
Wind and SDC A & B													
LSTAD8	14	3	21 5/8	8	5	4 5/8	6	20	16d Sinker or 10d common	2,280	2,950	1,820	2,950
LSTAD8RJ			35 1/8			18 1/8							
STAD8	12	3	21 5/8	8	5	4 5/8	6	22	16d Sinker or 10d common	2,265	3,675	1,905	3,175
STAD8RJ			35 1/8			18 1/8							
STAD10	12	3	21 5/8	10	5	1 5/8	6	28	16d Sinker or 10d common	3,135	4,675	2,540	4,480
STAD10RJ			36			16 1/8							
STAD14	12	3	32 1/8	14	5	4 5/8	6	30	16d Sinker or 10d common	4,745	5,010	4,745	5,010
STAD14RJ			39 5/8			12 1/8							
SDC C-F													
Stock No.	Steel Gage	Dimensions (in)					Concrete Stemwall Minimum Thickness (in)	Fastener Schedule		Allowable Tension Loads (lbf)			
										Uncracked		Cracked	
		W	L	l_E	D	CS		Qty	Type	Corner	Midwall	Corner	Midwall
LSTAD8	14	3	21 5/8	8	5	4 5/8	6	20	16d Sinker or 10d common	1,995	3,125	1,595	2,735
LSTAD8RJ			35 1/8			18 1/8							
STAD8	12	3	21 5/8	8	5	4 5/8	6	18	16d Sinker or 10d common	1,985	2,945	1,665	2,780
STAD8RJ			35 1/8			18 1/8							
STAD10	12	3	21 5/8	10	5	1 5/8	6	24	16d Sinker or 10d common	2,740	4,275	2,220	3,920
STAD10RJ			36			16 1/8							
STAD14	12	3	32 1/8	14	5	4 5/8	6	24	16d Sinker or 10d common	3,880	4,185	3,880	4,185
STAD14RJ			39 5/8			12 1/8							

For **SI:** 1 inch = 25.4 mm, 1 lbf = 4.45 N.

[1]Refer to Figure 3 for illustrations of the hold-downs and typical installation, and for additional installation requirements. Minimum 1- #4 rebar must be installed in the shear cone as shown in the figures.
[2]Wood members must comply with Section 3.9.3 and must have a minimum assigned specific gravity, SG_{NDS}, of 0.42.
[3]Corner strap location requires that the distance from the corner of the wall to the edge of the strap is no less than 1/2 inch. Midwall location requires that the minimum distance from the corner of the wall to the centerline of the strap is no less than 1.5 times the embedment depth. For edge distances between 1/2 inch and 1.5 times the embedment depth, use linear interpolation to determine the allowable load.
[4]Minimum anchor spacing for full capacity is 2 times the embedment depth (l_E). For spacing less than this, reduce the tabulated capacity proportionally (the capacity of two hold-downs, installed side by side with spacing l_E, is equal to the value of one hold-down multiplied by 1.5).
[5]To obtain design strengths (factored strengths) for use in LRFD, the tabulated allowable (ASD) loads for wind and SDC A & B must be multiplied by 1.67, and the tabulated allowable (ASD) loads for SDC C-F must be multiplied by 1.43.
[6]Wood thickness must be no less than 3 inches (2 - 2-by members).
[7]Deflection at highest allowable loads for installation over double 2-by lumber studs are as follows:
LSTAD8 = 0.025", STAD8 = 0.045", STAD10 = 0.051", STAD14 = 0.099".
LSTAD8RJ = 0.032", STAD8RJ = 0.050", STAD10RJ = 0.058", STAD14RJ = 0.103".
[8]The strap must be fastened with nails starting from lowest pair of nail holes above the clear span and working up towards the top of the strap. In many cases, not all nail holes need to be filled.
[9]No capacity increase is allowed for the use of additional nails beyond what is required in the table.

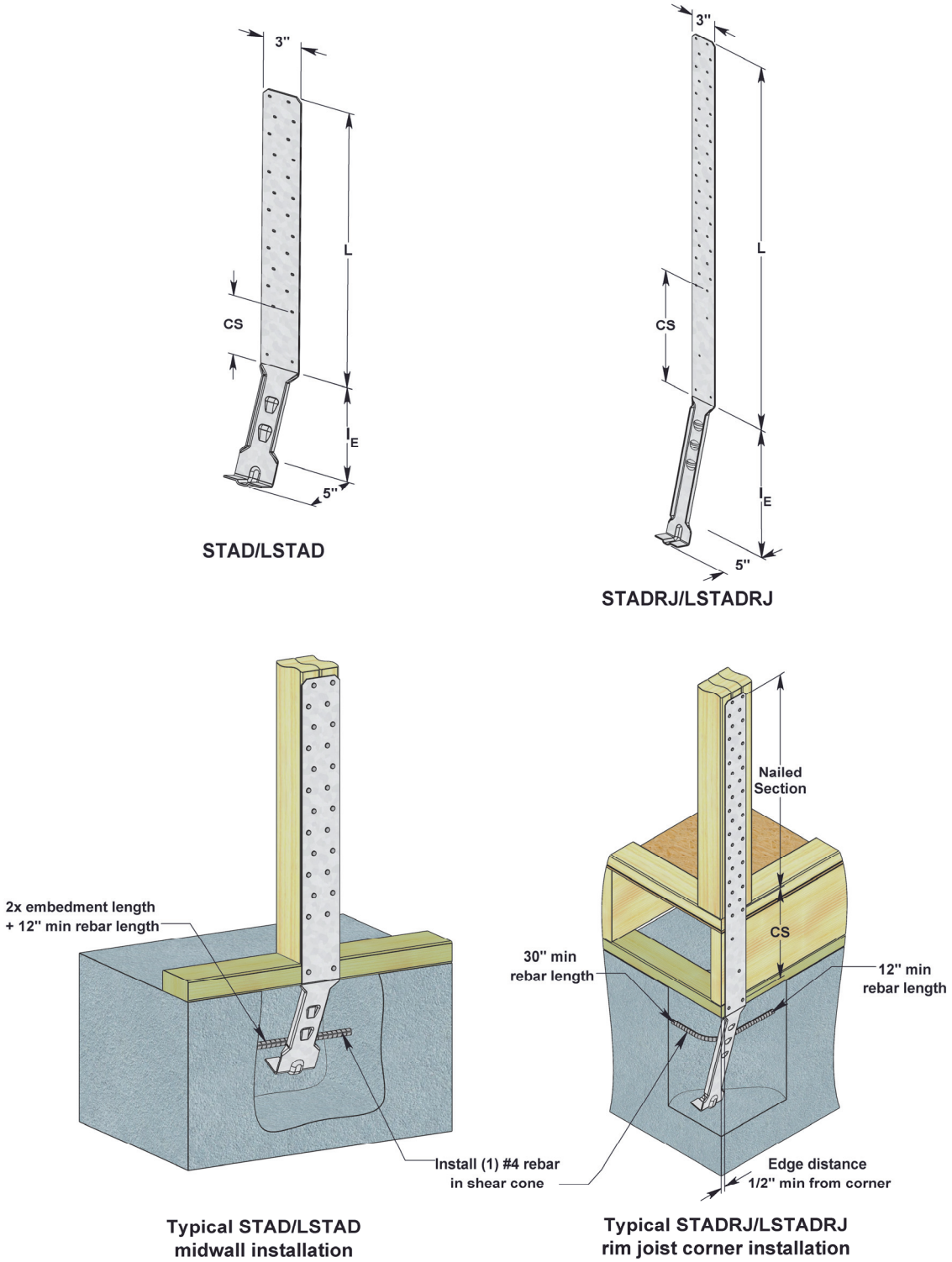

FIGURE 3—STAD SERIES STRAP STYLE HOLD-DOWN CONNECTORS AND ASSEMBLIES

TABLE 4—WAS WET POST ANCHOR ALLOWABLE LOADS[1,2]

STOCK NUMBER	STEEL GAGE		DIMENSIONS (inches)					WOOD POST NOMINAL SIZE	FASTENER SCHEDULE[3]		ALLOWABLE LOADS (lbf)[4,5,6]							
											Concrete Condition	Wind and SDC A & B[7]			SDC C-F[8]			Download[9] C_D = 1.0
	Support Stand	Strap	W_1	W_2	H_1	H_2	L		Qty	Type		Uplift (C_D = 1.6)	F_1 (C_D = 1.6)	F_2 (C_D = 1.6)	Uplift (C_D = 1.6)	F_1 (C_D = 1.6)	F_2 (C_D = 1.6)	
WAS44	16	14	$3^9/_{16}$	$3^1/_2$	$6^3/_4$	$3^1/_2$	$2^1/_4$	4x4	14	16d Common	Uncracked	3,090	1,365	1,095	2,705	1,195	960	6,775
											Cracked	2,165	955	770	1,895	835	675	
									2	$^1/_2$"Ø Bolts	Uncracked	3,075	1,365	1,095	2,705	1,195	960	6,775
											Cracked	2,165	955	770	1,895	835	675	
WAS46	12	14	$3^9/_{16}$	$5^1/_2$	$6^3/_4$	$3^1/_2$	$2^1/_4$	4x6	14	16d Common	Uncracked	3,090	1,365	1,095	2,705	1,195	960	13,815
											Cracked	2,165	955	770	1,895	835	675	
									2	$^1/_2$"Ø Bolts	Uncracked	3,075	1,365	1,095	2,705	1,195	960	13,815
											Cracked	2,165	955	770	1,895	835	675	
WAS66	12	12	$5^1/_2$	$5^1/_2$	$6^3/_4$	5	$2^1/_4$	6x6	14	16d Common	Uncracked	3,365	1,955	1,685	3,135	1,715	1,685	16,005
											Cracked	2,505	1,370	1,685	2,195	1,200	1,665	
									2	$^1/_2$"Ø Bolts	Uncracked	3,575	1,955	1,685	3135	1,715	1,685	16,005
											Cracked	2,505	1,370	1,685	2,195	1,200	1,665	

For **SI**: 1 inch = 25.4 mm, 1 lbf = 4.45 N, 1 psi = 6.89 kPa

[1]Design values in this table apply to the connection of the wood member to the concrete. The capacities of the wood members and concrete members are outside the scope of this report and must be determined by others.
[2]Refer to Figure 4 for illustrations of the WAS Wet Post Anchor and typical installation; additional installation requirements, and depiction of load directions.
[3]Allowable loads are based on fastening of the WAS anchor to the post using either nails only or bolts only. Nails and bolts must not be used in combination. See Section 3.9.4 for required fastener dimensions and mechanical properties.
[4]Wood members must comply with Section 3.9.3 and must have a minimum assigned specific gravity, SG_{NDS}, of 0.50.
[5]Minimum specified concrete compressive strength, f'_c, is 2,500 psi.
[6]Allowable Uplift, F1 and F2 loads are based on allowable stress design (ASD) and include the load duration factor (C_D) corresponding with wind and earthquake loading in accordance with the NDS (C_D = 1.6). No further increase is allowed.
[7]To obtain design strengths for use in LRFD for Wind and SDC A & B: multiply the tabulated allowable (ASD) loads for Wind and SDC A & B by 1.67.
[8]To obtain design strengths for use in LRFD for SDC C-F: multiply the tabulated allowable (ASD) loads for SDC C-F by 1.43.
[9]Allowable download capacity is applicable to lumber with a minimum compression parallel to grain reference design value of 775 psi and normal load duration. No increase is allowed for wood members with greater compression parallel to grain reference design values, or for other load durations.

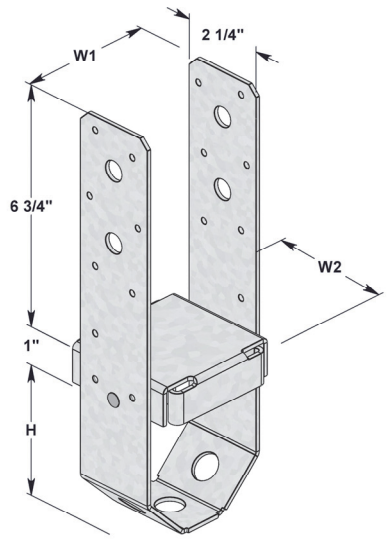

WAS

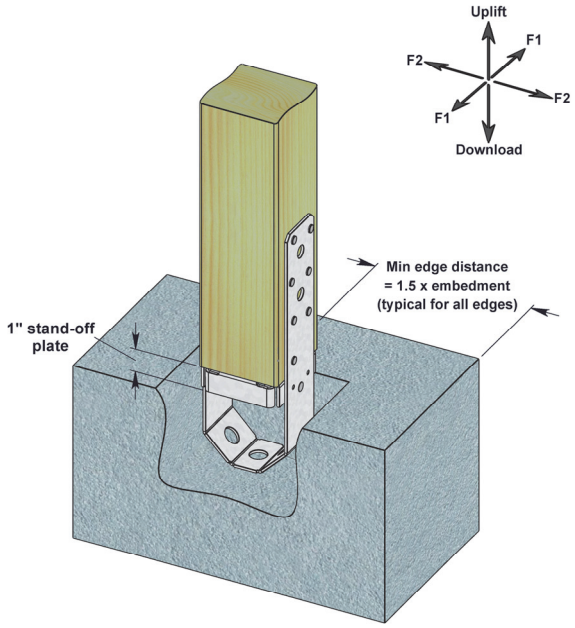

Typical WAS Installation

FIGURE 4—WAS WET POST ANCHOR DIMENSIONS AND INSTALLATION DETAILS

TABLE 5—WE WET POST ANCHOR ALLOWABLE LOADS[1,2]

STOCK NUMBER	STEEL GAGE	DIMENSIONS (inches)				WOOD POST NOMINAL SIZE[3]	FASTENER SCHEDULE[4]		Concrete Condition	ALLOWABLE LOADS (lbf) [5,6]						DOWN-LOAD[10] (C_D = 1.0)
										Wind and SDC A & B [7,8]			SDC C-F [7,9]			
		W_1	H_1	H_2	L		Qty	Type		Uplift (C_D = 1.6)	F1 (C_D = 1.6)	F2 (C_D = 1.6)	Uplift (C_D = 1.6)	F1 (C_D = 1.6)	F2 (C_D = 1.6)	
WE44	12	$3^1/_2$	$4^3/_4$	$3^3/_8$	$3^1/_4$	4x4	12	16d Common	Uncracked	1405	860	970	1255	755	850	15335
									Cracked	1245	600	680	1090	525	595	
								$^1/_2$" Ø Bolts	Uncracked	1430	860	970	1255	755	850	
									Cracked	1245	600	680	1090	525	595	
WE44R	12	4	5	$3^5/_8$	$3^3/_8$	4X4 Rough	12	16d Common	Uncracked	1405	860	970	1255	755	850	
									Cracked	1245	600	680	1090	525	595	
WE46	12	$5^1/_2$	$4^3/_4$	$3^3/_8$	$3^1/_4$	4x6	12	16d Common	Uncracked	1405	860	970	1255	755	850	24130
									Cracked	1245	600	680	1090	525	595	
								$^1/_2$" Ø Bolts	Uncracked	1430	860	970	1255	755	850	
									Cracked	1245	600	680	1090	525	595	
WE46R	12	6	5	$3^5/_8$	$3^3/_8$	4x6 Rough	12	16d Common	Uncracked	1405	860	970	1255	755	850	
									Cracked	1245	600	680	1090	525	595	
WE66	12	$5^1/_2$	5	$3^3/_8$	$5^3/_8$	6x6	12	16d Common	Uncracked	1405	860	970	1255	755	850	29565
									Cracked	1245	600	680	1090	525	595	
WE66R	12	6	5	$3^5/_8$	$5^3/_8$	6x6 Rough	12	16d Common	Uncracked	1405	860	970	1255	755	850	
									Cracked	1245	600	680	1090	525	595	

For **SI**: 1 inch = 25.4 mm, 1 lbf = 4.45 N, 1 psi = 6.89 kPa

[1]Design values in this table apply to the connection of the wood member to the concrete. The capacities of the wood members and concrete members are outside the scope of this report and must be determined by others.
[2]Refer to Figure 5 for illustrations of the WE Wet Post Anchor and typical installation; additional installation requirements, and depiction of load directions.
[3]Actual dimensions of rough-sized lumber must be in accordance with Standard Grading Rules for West Coast Lumber No. 17, West Coast Lumber Inspection Bureau.
[4]Allowable loads are based on fastening of the WE anchor to the post using either nails only or bolts only. Nails and bolts must not be used in combination. See Section 3.9.4 for required fastener dimensions and mechanical properties.
[5]Wood members must comply with Section 3.9.3 and must have a minimum assigned specific gravity, SG_{NDS}, of 0.50.
[6]Minimum specified concrete compressive strength, f'_c, is 2,500 psi.
[7]Allowable uplift, F1 and F2 loads are based on allowable stress design (ASD) and include the load duration factor (C_D) corresponding with wind and seismic loading in accordance with the NDS (C_D = 1.6). No further increase is allowed.
[8]To obtain design strengths for use in LRFD for Wind and SDC A & B: multiply the tabulated allowable (ASD) loads for Wind and SDC A & B by 1.67.
[9]To obtain design strengths for use in LRFD for SDC C-F: multiply the tabulated allowable (ASD) loads for SDC C-F by 1.43.
[10]Allowable download capacity is applicable to lumber with a minimum compression parallel to grain reference design value of 1350 psi for nominally or rough-cut 4x4 and 4x6 posts and 1000 psi for nominally or rough-cut 6x6 posts and normal load duration. No increase is allowed for wood members with greater compression parallel to grain reference design values, or for other load durations.

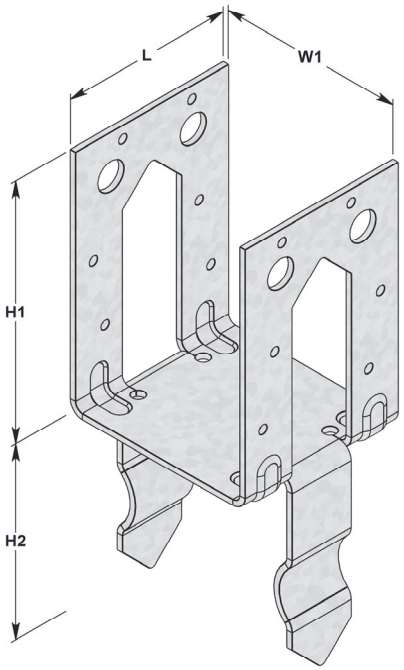

WE

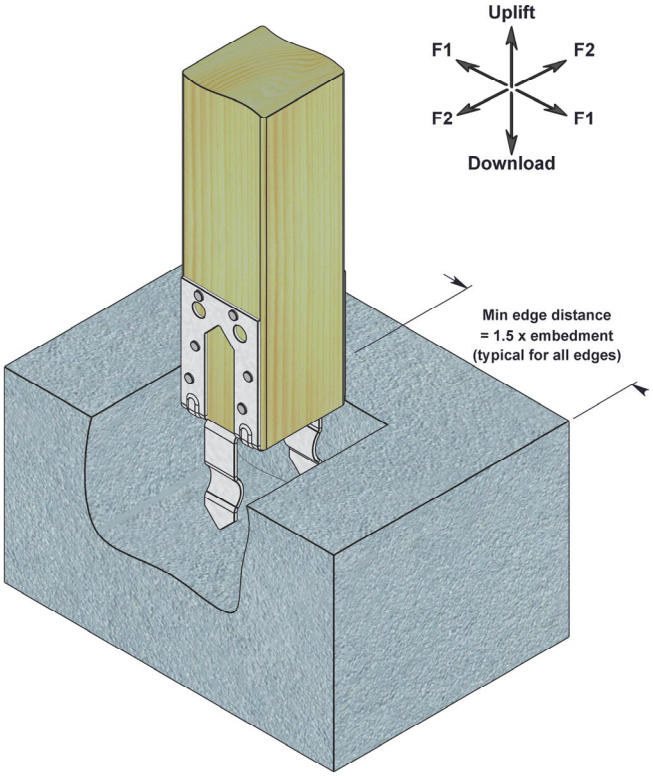

Typical WE Installation

FIGURE 5—WE WET POST ANCHOR DIMENSIONS AND INSTALLATION DETAILS

TABLE 6—EPB/EBG ELEVATED POST BASE ALLOWABLE LOADS[1,2]

STOCK NUMBER	BUCKET STEEL GAGE	DIMENSIONS (inches)				WOOD POST NOMINAL SIZE	FASTENER SCHEDULE[3]		Concrete Condition	ALLOWABLE LOADS (lbf)[4,5,6,7]						
										Wind and SDC A & B[8]			SDC C-F[9]			Download[10] C_D = 1.0
		W	L	H_1	H_2		Qty	Type		Uplift C_D = 1.6	F1 C_D = 1.6	F2 C_D = 1.6	Uplift C_D = 1.6	F1 C_D = 1.6	F2 C_D = 1.6	
EPB4408	12	$3^9/_{16}$	3	3	8	4x4	8	16d Common	Uncracked	1,110	1,440	1,295	970	1,260	1,135	3,045
									Cracked	775	1,010	905	680	885	795	
EPB4608	12	$3^9/_{16}$	5	3	8	4x6	12	16d Common	Uncracked	1,110	1,440	1,295	970	1,260	1,135	3,045
									Cracked	775	1,010	905	680	885	795	
EPB6608	12	$5^9/_{16}$	5	$3^3/_{16}$	8	6x6	12	16d Common	Uncracked	1,110	1,440	1,295	970	1,260	1,135	4,665
									Cracked	775	1,010	905	680	885	795	
EBG44-TZ	14	$3^9/_{16}$	$2^3/_4$	$2^3/_8$	$7^1/_2$	4x4	8	16d Common	Uncracked	1,085	1,440	1,295	1,000	1,260	1,135	4,615
									Cracked	800	1,010	905	700	885	795	

For **SI**: 1 inch = 25.4 mm, 1 lbf = 4.45 N, 1 psi = 6.89 kPa

[1]Design values in this table apply to the connection of the wood member to the concrete. The capacities of the wood members and concrete members are outside the scope of this report and must be determined by others.
[2]Refer to Figure 6 for illustrations of the Elevated Post Bases and typical installation; additional installation requirements; and depiction of load directions.
[3]See Section 3.9.4 for required fastener dimensions and mechanical properties.
[4]Wood members must comply with Section 3.9.3 and must have a minimum assigned specific gravity, SG_{NDS}, of 0.50.
[5]Allowable loads are based on a maximum distance of 1 inch between the top of the concrete foundation and the bottom of the steel bucket.
[6]Minimum specified concrete compressive strength, f'_c, is 2,500 psi.
[7]Allowable uplift, F1, and F2 loads are based on allowable stress design (ASD) and include the load duration factor (C_D) corresponding to wind and earthquake loading in accordance with the NDS (C_D = 1.6). No further increase is allowed.
[8]To obtain design strengths for use in LRFD for Wind and SDC A & B: multiply the tabulated allowable (ASD) loads for Wind and SDC A & B by 1.67.
[9]To obtain design strengths for use in LRFD for SDC C-F: multiply the tabulated allowable (ASD) loads for SDC C-F by 1.43.
[10]Allowable download capacity is applicable to lumber with a minimum compression parallel to grain reference design value of 775 psi and normal load duration. No increase is allowed for wood members with greater compression parallel to grain reference design values, or for other load durations.

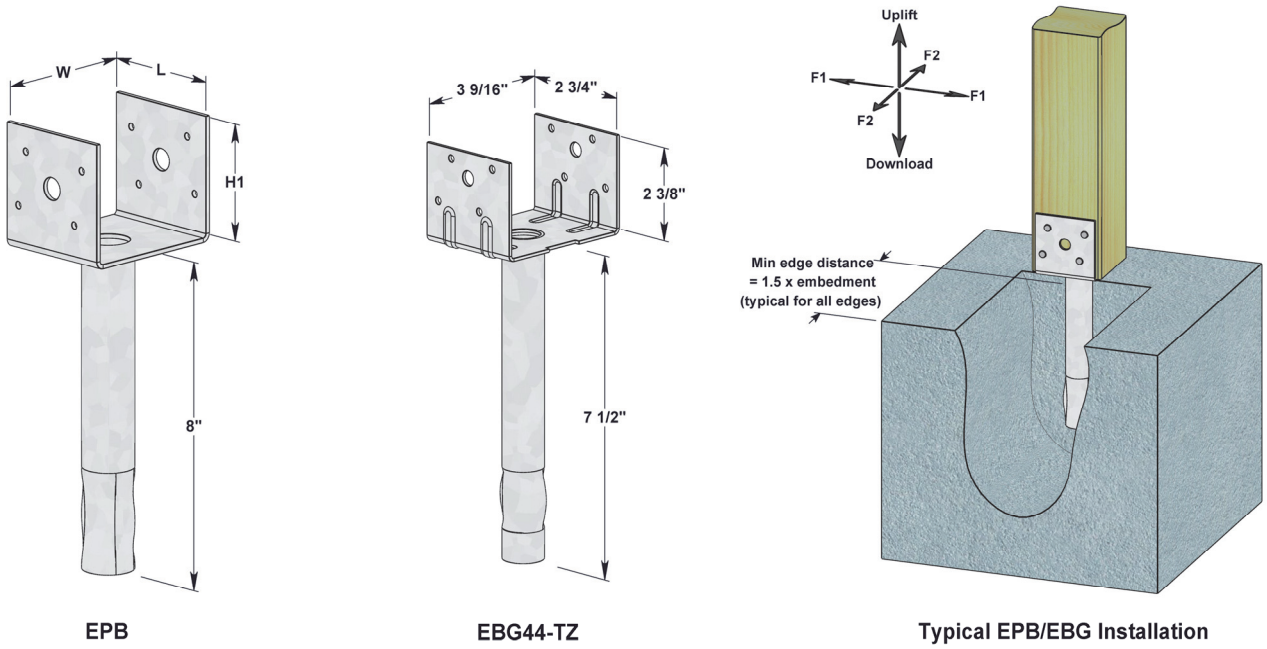

FIGURE 6—EPB, EBG ELEVATED POST BASE DIMENSIONS AND INSTALLATION DETAILS

TABLE 7—CBE COLUMN BASE SERIES ALLOWABLE LOADS [1,2]

STOCK NO.	STEEL GAGE	DIMENSIONS (inches)					WOOD POST NOMINAL SIZE[3]	FASTENER SCHEDULE[4]		CONCRETE CONDITION	ALLOWABLE LOADS (lbs.) [5,6,7,9,10]		
		W1	W2	H	L	EMBED[8]		Qty	Type		Wind and SDC A & B (C_D=1.60)	SDC C-F (C_D=1.60)	DOWNLOAD[11] (C_D=1.0)
CBE44	12	$3^9/_{16}$	$3^1/_2$	$7^1/_2$	2	$6^1/_2$	4x4	12	16d Common	Uncracked	2,975	2,975	16,835
										Cracked	2,975	2,770	
								2	$^1/_2$ Ø Bolt	Uncracked	4,090	3,605	
										Cracked	3,160	2,770	
CBE44R	12	$4^1/_{16}$	$3^1/_2$	$7^1/_2$	2	$6^1/_4$	4x4 Rough	12	16d Common	Uncracked	2,975	2,975	
										Cracked	2,975	2,770	
								2	$^1/_2$ Ø Bolt	Uncracked	4,090	3,605	
										Cracked	3,160	2,770	
CBE46	12	$3^9/_{16}$	$5^1/_2$	$7^1/_2$	2	$6^1/_2$	4x6	12	16d Common	Uncracked	2,975	2,975	26,450
										Cracked	2,975	2,770	
								2	$^1/_2$ Ø Bolt	Uncracked	4,090	3,605	
										Cracked	3,160	2,770	
CBE46R	12	$4^1/_{16}$	$5^1/_2$	$7^1/_2$	2	$6^1/_4$	4x6 Rough	12	16d Common	Uncracked	2,975	2,975	
										Cracked	2,975	2,770	
								2	$^1/_2$ Ø Bolt	Uncracked	4,090	3,605	
										Cracked	3,160	2,770	
CBE66	12	$5^1/_2$	$5^1/_2$	$7^1/_2$	2	$5^1/_2$	6x6	12	16d Common	Uncracked	2,975	2,975	30,250
										Cracked	2,975	2,770	
								2	$^1/_2$ Ø Bolt	Uncracked	4,090	3,605	
										Cracked	3,160	2,770	
CBE66R	12	$6^1/_{16}$	6	$7^1/_2$	2	$5^1/_4$	6x6 Rough	12	16d Common	Uncracked	2,975	2,975	
										Cracked	2,975	2,770	
								2	$^1/_2$ Ø Bolt	Uncracked	4,090	3,605	
										Cracked	3,160	2,770	

For **SI:** 1 inch = 25.4 mm, 1 lbf = 4.45 N, 1 psi = 6.89 kPa

[1]Design values in this table apply to the connection of the wood member to the concrete. The capacities of the wood members and concrete members are outside the scope of this report and must be determined by others.
[2]Refer to Figure 7 for illustrations of the CBE Column Base and typical installation in a concrete slab, additional installation requirements, and load direction. See Section 3.7 for installation in a cast-in-place concrete pier.
[3]Actual dimensions of rough-sized lumber must be in accordance with Standard Grading Rules for West Coast Lumber No. 17, West Coast Lumber Inspection Bureau.
[4]Allowable loads are based on fastening of the CBE anchor to the post using either nails only or bolts only. Nails and bolts must not be used in combination.See Section 3.9.4 for required fastener dimensions and mechanical properties.
[5]Wood members must comply with Section 3.9.3 and must have a minimum assigned specific gravity, SG_{NDS}, of 0.50.
[6]Minimum specified concrete compressive strength, f'_c, is 2,500 psi.
[7]Allowable uplift loads are based on allowable stress design (ASD) and include the load duration factor (C_D) corresponding with wind or seismic loading in accordance with the NDS (C_D = 1.6). No further increase is allowed.
[8]The CBE column base must be embedded into concrete up to this depth.
[9]To obtain design strengths for use in LRFD for Wind and SDC A & B: multiply the tabulated allowable (ASD) loads for Wind and SDC A & B by 1.67.
[10]To obtain design strengths for use in LRFD for SDC C-F: multiply the tabulated allowable (ASD) loads for SDC C-F by 1.43.
[11]Allowable download capacity is applicable to lumber with a minimum compression parallel to grain reference design value of 1350 psi for nominally or rough-cut 4x4 and 4x6 posts and 1000 psi for nominally or rough-cut 6x6 posts and normal load duration. No increase is allowed for wood members with greater compression parallel to grain reference design values, or for other load durations.

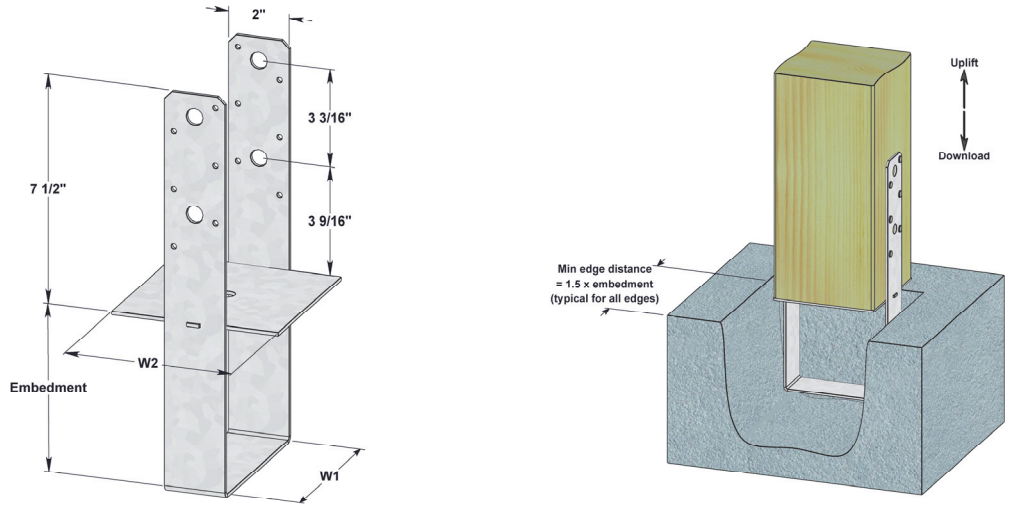

CBE

Typical CBE Installation

FIGURE 7—CBE COLUMN BASE DIMENSIONS AND INSTALLATION DETAILS (NAIL OPTION SHOWN)

TABLE 8—EPBT-TZ ELEVATED POST BASE ALLOWABLE LOADS [1,2]

STOCK NUMBER	STEEL GAGE	THREAD ROD DIA. (inch)	DIMENSIONS (inches)				WOOD POST NOMINAL SIZE	FASTENER SCHEDULE[3]		INSTALLATION TYPE	ALLOWABLE LOADS (lbf) [4,5,6]	
											Uncracked Concrete Wind and SDC A & B Uplift [7,8,10] (C_D = 1.60)	Download [9] C_D = 1.0
	Bucket		W	L	H1	H2		Qty	Type			
EPB44T-TZ	12	$^5/_8$	$3^9/_{16}$	$2^7/_8$	$2^7/_{16}$	$4^7/_8$	4x4	8	10d Common	Concrete Pier Block[11]	- -	5,525
										Cast-in-place Concrete	790	5,525

For **SI:** 1 inch = 25.4 mm, 1 lbf = 4.45 N, 1 psi = 6.89 kPa

[1]Design values in this table apply to the connection of the wood member to the concrete. The capacities of the wood members and concrete members are outside the scope of this report and must be determined by others.
[2]Refer to Figure 8 for illustrations of the EPBT Post Base and typical installation; additional installation requirements, and load direction.
[3]See Section 3.9.4 for required fastener dimensions and mechanical properties.
[4]Wood members must comply with Section 3.9.3 and must have a minimum assigned specific gravity, SG_{NDS}, of 0.50.
[5]Allowable loads are based on a maximum distance of $2^1/_2$ inches between the concrete foundation and the bottom of the post base.
[6]Minimum specified concrete compressive strength, f'_c, is 2,500 psi.
[7]Allowable uplift loads are based on allowable stress design (ASD) and include the load duration factor (C_D) corresponding with wind and earthquake loading in accordance with the NDS (C_D = 1.6). No further increase is allowed.
[8]To obtain design strengths for use in LRFD for Wind and SDC A & B: multiply the tabulated allowable (ASD) loads for Wind and SDC A & B by 1.67.
[9]The allowable download capacity is applicable to lumber with a minimum compression parallel to grain reference design value of 775 psi and normal load duration. No increase is allowed for wood members with greater compression parallel to grain reference design values, or for other load durations.
[10]The allowable uplift capacity requires a minimum edge distance of 5 inches and concrete member capable of resisting the upward force. The allowable download capacity requires a minimum edge distance of 4 inches.
[11]For Pier Block installation, drill a $^5/_8$-inch-diameter hole a minimum of 4 inches deep.

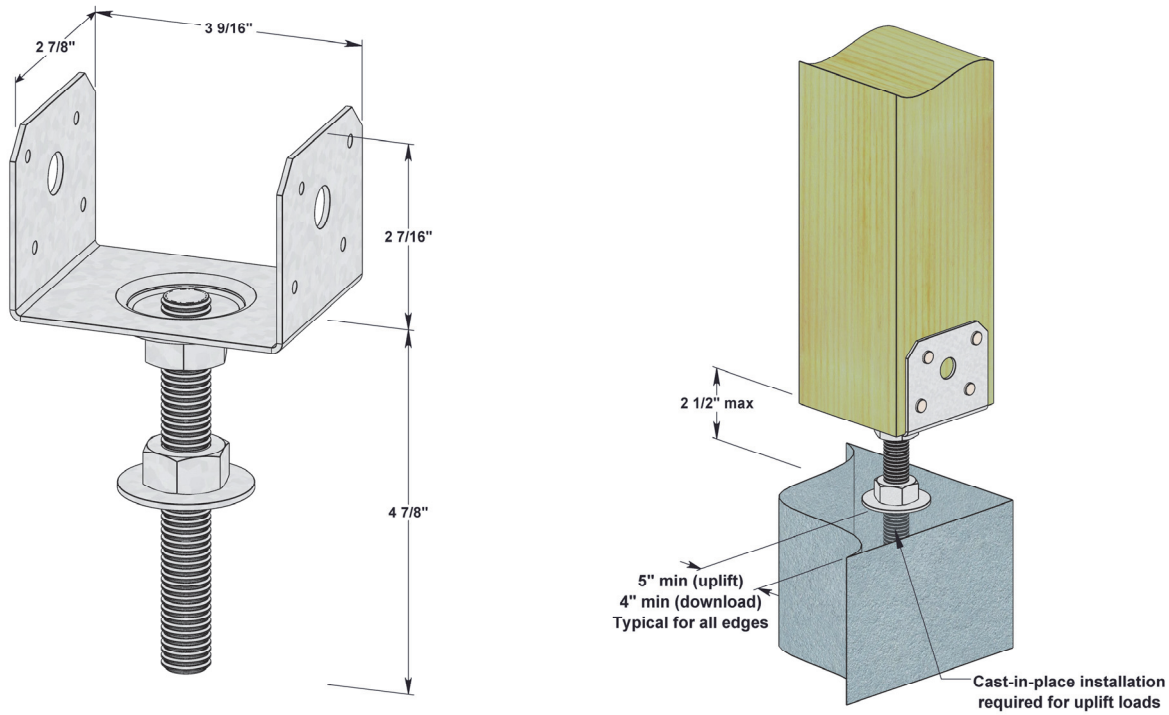

EPB44T-TZ

Typical EPB44T-TZ installation

FIGURE 8—EPB44T-TZ ELEVATED POST BASE DIMENSIONS AND INSTALLATION DETAILS

DIVISION: 03 00 00—CONCRETE
Section: 03 16 00—Concrete Anchors

DIVISION: 06 00 00—WOOD, PLASTICS AND COMPOSITES
Section: 06 05 23—Wood, Plastic, and Composite Fastenings

REPORT HOLDER:

MITEK® INC.

EVALUATION SUBJECT:

CAST-IN-PLACE STRUCTURAL CONNECTORS AND COLUMN BASES EMBEDDED IN CONCRETE

1.0 REPORT PURPOSE AND SCOPE

Purpose:

The purpose of this evaluation report supplement is to indicate that the cast-in-place structural connectors and column bases embedded in concrete, described in ICC-ES evaluation report ESR-2787, have also been evaluated for compliance with the codes noted below as adopted by the Los Angeles Department of Building and Safety (LADBS).

Applicable code editions:

- 2023 *City of Los Angeles Building Code* (LABC)
- 2023 *City of Los Angeles Residential Code* (LARC)

2.0 CONCLUSIONS

The cast-in-place structural connectors and column bases embedded in concrete, described in Sections 2.0 through 7.0 of the evaluation report ESR-2787, comply with the LABC Chapter 23, and the LARC, and are subject to the conditions of use described in this supplement.

3.0 CONDITIONS OF USE

The cast-in-place structural connectors and column bases embedded in concrete, described in this evaluation report supplement must comply with all of the following conditions:

- All applicable sections in the evaluation report ESR-2787.
- The design, installation, conditions of use and identification are in accordance with the 2021 *International Building Code®* (IBC) provisions noted in the evaluation report ESR-2787.
- The design, installation and inspection are in accordance with additional requirements of LABC Chapters 16, 17 and 23 as applicable.
- Under the LARC, an engineered design in accordance with LARC Section R301.1.3 must be submitted.
- The seismic design provisions for hillside buildings referenced in LABC Section 2301.1 have not been considered and are outside the scope of this supplement.
- A 25% reduction in allowable loads specified in the evaluation report ESR-2787 shall be taken in hold-down devices as referenced in LABC Section 2305.5.

This supplement expires concurrently with the evaluation report ESR-2787, reissued May 2025.

ICC-ES Evaluation Reports are not to be construed as representing aesthetics or any other attributes not specifically addressed, nor are they to be construed as an endorsement of the subject of the report or a recommendation for its use. There is no warranty by ICC Evaluation Service, LLC, express or implied, as to any finding or other matter in this report, or as to any product covered by the report.

Copyright © 2025 ICC Evaluation Service, LLC. All rights reserved.

DIVISION: 03 00 00—CONCRETE
Section: 03 16 00—Concrete Anchors

DIVISION: 06 00 00—WOOD, PLASTICS AND COMPOSITES
Section: 06 05 23—Wood, Plastic, and Composite Fastenings

REPORT HOLDER:

MITEK® INC.

EVALUATION SUBJECT:

CAST-IN-PLACE STRUCTURAL CONNECTORS AND COLUMN BASES EMBEDDED IN CONCRETE

1.0 REPORT PURPOSE AND SCOPE

Purpose:

The purpose of this evaluation report supplement is to indicate that cast-in-place structural connectors and column bases embedded in concrete, described in ICC-ES evaluation report ESR-2787, have also been evaluated for compliance with the codes noted below.

Applicable code editions:

- 2023 *Florida Building Code—Building*
- 2023 *Florida Building Code—Residential*

2.0 CONCLUSIONS

The cast-in-place structural connectors and column bases embedded in concrete, described in Sections 2.0 through 7.0 of ICC-ES evaluation report ESR-2787, comply with the *Florida Building Code—Building*, and the *Florida Building Code—Residential.* The design requirements must be determined in accordance with the *Florida Building Code—Building* or the *Florida Building Code—Residential,* as applicable. The installation requirements noted in ICC-ES evaluation report ESR-2787 for the 2021 *International Building Code®* meet the requirements of the *Florida Building Code—Building* or the *Florida Building Code—Residential,* as applicable, with the following conditions:

- Use of fasteners with preservative- or fire-retardant-treated lumber must be in accordance with Section 3.9.4.3 of evaluation report ESR-2787. Bolts used in contact with preservative-treated or fire-retardant-treated wood must comply with *Florida Building Code—Building* Section 2304.10.5 and *Florida Building Code—Residential* Section R317.3, as applicable.

Foundation anchors with a G185 coating may be used with preservative- or fire-retardant-treated lumber in accordance with *Florida Building Code—Building* Section 2304.10.5. Other connectors addressed in evaluation report ESR-2787 may be used in accordance with the manufacturer's recommendations only.Use of the cast-in-place structural connectors and column bases embedded in concrete has also been found to be in compliance with the High-Velocity Hurricane Zone provisions of the *Florida Building Code—Building*, and the *Florida Building Code—Residential* with the following condition:

a. For connections subject to uplift, the connection must be designed for no less than 700 pounds (3114 N).

For products falling under Florida Rule 61G20-3, verification that the report holder's quality assurance program is audited by a quality assurance entity approved by the Florida Building Commission for the type of inspections being conducted is the responsibility of an approved validation entity (or the code official when the report holder does not possess an approval by the Commission). Florida Rule 61G20-3 is applicable to products and/or systems which comprise the building envelope and structural frame for compliance with the structural requirements of the Florida Building Code.

This supplement expires concurrently with the evaluation report ESR-2787, reissued May 2025.

ICC-ES Evaluation Reports are not to be construed as representing aesthetics or any other attributes not specifically addressed, nor are they to be construed as an endorsement of the subject of the report or a recommendation for its use. There is no warranty by ICC Evaluation Service, LLC, express or implied, as to any finding or other matter in this report, or as to any product covered by the report.

Copyright © 2025 ICC Evaluation Service, LLC. All rights reserved.